FPV CAMERA

FPV-001_M

FPV-001_M CAMERA is a compact and lightweight product designed for FPV racing drones, delivering high-definition and low-latency images.

【Key Features】

1. Excellent night vision performance with ultra-low illumination of F1.0/0.000001LUX
2. Ultra-low latency (≤30ms)
3. Ultra-wide input voltage range of 5-40V
4. Equipped with WDR (Wide Dynamic Range), enabling clear visibility of surrounding environments even in complex or backlit conditions

Technical Specifications

Thermal imaging	
Sensor	1/1.8” CMOS Sensor
Horizontal Resolution	1800TVl
Pixel Size	4.0um
Image Aspect Ratio	4:3/16:9 selectable
Video System	PAL/NTSC selectable
Field of View (FOV):	FOV ： 125°
Electronic Shutter	Auto

Electronic Shutter	F1.0/0.000001Lux
White Balanc	Auto
Operating Voltage	5V-40V
Noise Reduction	3D
Day/Night Mode	COLOR
OSD Menu	Supported
Input Voltage	5V-40V
Input Voltage	-20℃-70℃
Operating Temperature	29mm*19mm*19mm
Operating Current	60mA@12V
WDR	Super WDR(HDR)
Lens	8MP
Languages	中文/English
Scene Modes	Auto/Color/B&W/EXT

Interface Wiring Diagram：

Pin Definition：

1	POWER	DC 5~40V
2	GND	GND
3	CVBS	CVBS video signal
4	GND	GND
5	OSD	OSD

Connector Parameters：

Dimensions

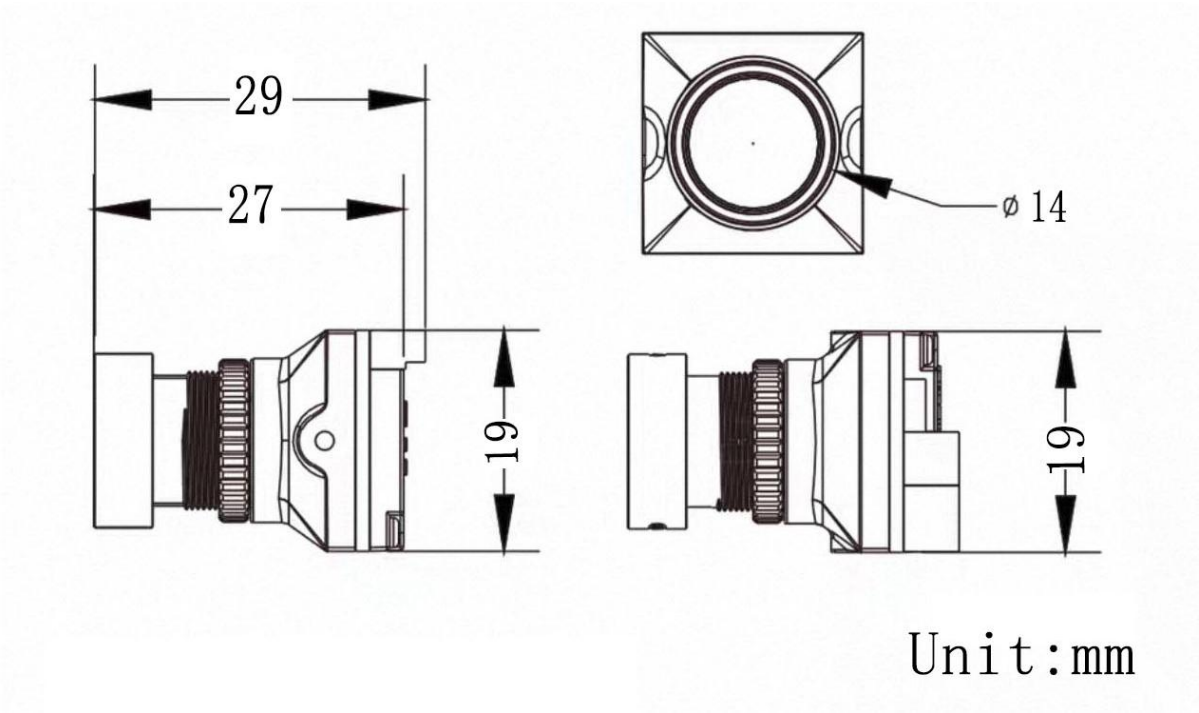

Installation and Wiring

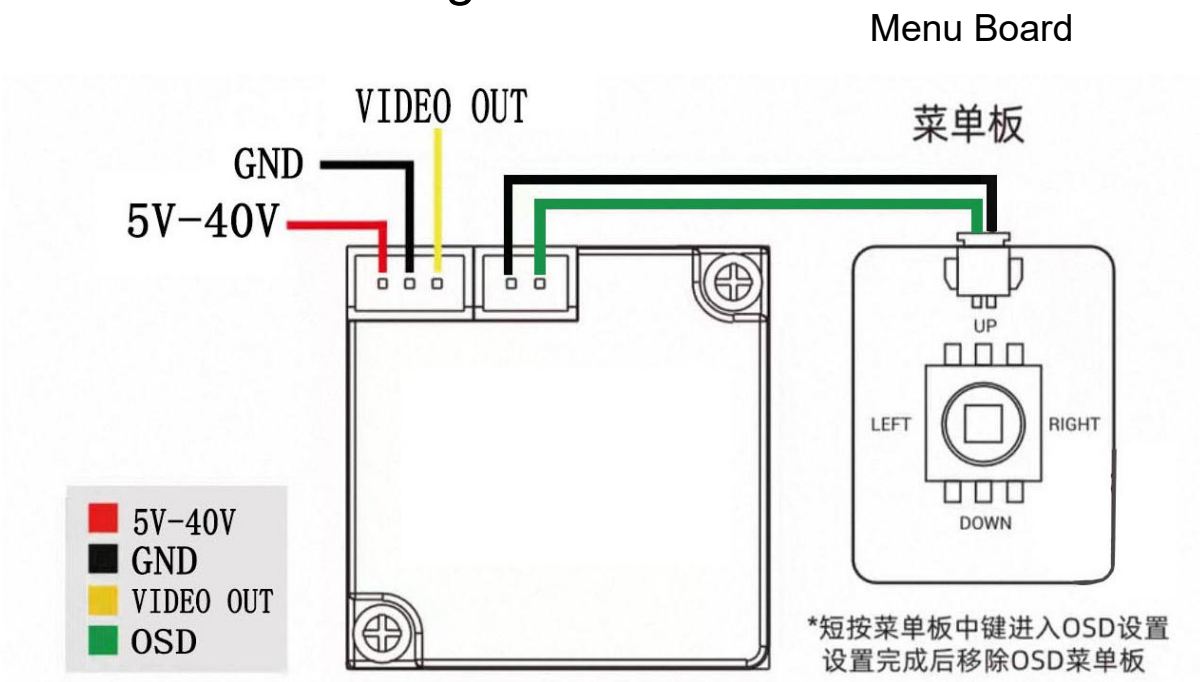

Press the middle button on the menu board briefly to enter OSD settings.
Remove the OSD menu board after completing the settings.

Module Dimensions：

29mm*19mm*19mm （±0.3mm Error）